Wire Rope Pulley 3 Ton 16mm rope

Wire Rope Pulley 3 Ton 16mm rope

Key features

- 3 Year Warranty, Customer Support and Service in the USA

Prowinch Snatch Blocks Pulleys

All of our **Snatch Blocks Pulleys** are created with the goal of offering the best quality and performance. Key components such as lifespan factors are constantly tested and improved in order to offer the best product for the price.

Technical Specifications

Rated Load Capacity	6600 lb / 3000 kg	**Pulley Diameter**	Ø7.87 in / Ø200 mm
Compatible wire rope	5/8 in / 16 mm	**Warranty**	3 Year

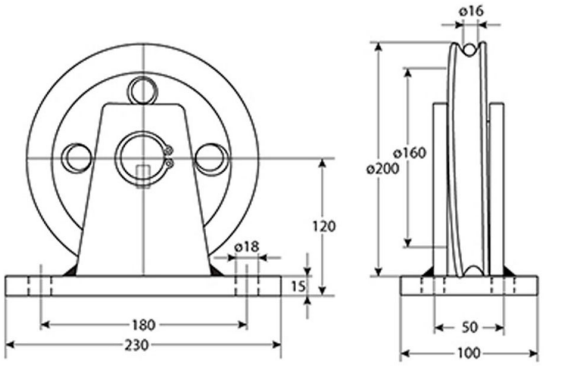

Dimensions in mm / Dimensiones en mm

Imágenes Referenciales

Unit Weight & Dimensions

Total Unit Weight	21 lbs / 10 Kg

Packaging Weight & Dimensions

Package 1 Net Weight	21 lbs / 10 Kg
Package 1 Width	9.5 in / 24.13 cm
Package 1 Gross Weight	21 lbs / 10 Kg
Package 1 Height	5 in / 12.7 cm
Package 1 Length	5 in / 12.7 cm